What is a magnet?

A magnet is an object made of certain materials, which create a magnetic field. Every magnet has at least one North Pole and one South Pole. **By convention, we say that the magnetic field lines leave the North end of a magnet and enter the South end of a magnet.** This is an example of a **magnetic dipole** ("di" means two, thus two poles). If you take a bar magnet and break it into two pieces, each piece will again have a North Pole and a South Pole. If you take one of those pieces and break it into two, each of the smaller pieces will have a North Pole and a South Pole. No matter how small the pieces of the magnet become, each piece will have a North Pole and a South Pole. It has not been shown to be possible to end up with a single North Pole or a single South Pole, which is a **monopole** ("mono" means one or single, thus one pole).

History

The ancient Greeks and Chinese discovered that certain rare stones, called lodestones, were naturally magnetized. These stones could attract small pieces of iron in a magical way, and were found to always point in the same direction when allowed to swing freely suspended by a piece of string. The name comes from Magnesia, a district in Thessaly, Greece.

Thirteen Facts about Magnets

1. North poles point north, south poles point south. The north pole of the magnet points to the geomagnetic north pole (a south magnetic pole) located in Canada above the Arctic Circle.
2. Like poles repel, unlike poles attract.
3. Magnetic forces attract only magnetic materials.
4. Magnetic forces act at a distance The force of attraction or repulsion varies inversely with the distance squared. The strength of a magnet varies at different locations on the magnet. Magnets are strongest at their poles.
5. While magnetized, temporary magnets act like permanent magnets. (Example: paper clips)
6. Magnets strongly attract steel, iron, nickel, cobalt, gadolinium **(Ferromagnetism)**
7. Magnets slightly attract liquid oxygen and other materials **(Paramagnetic)**
8. Magnets slightly repel water, carbon and boron **(Diamagnetism)**
9. A coil of wire with an electric current flowing through it becomes a magnet.
10. Putting iron inside a current-carrying coil increases the strength of the electromagnet.
11. A changing magnetic field induces an electric current in a conductor.
12. A charged particle experiences no magnetic force when moving parallel to a magnetic field, but when it is moving perpendicular to the field it experiences a force perpendicular to both the field and the direction of motion.
13. A current-carrying wire in a perpendicular magnetic field experiences a force in a direction perpendicular to both the wire and the field.

What types of magnets are there?

Permanent Magnets

Permanent magnets are those we are most familiar with, such as the magnets hanging onto our refrigerator doors. They are permanent in the sense that once they are magnetized, they retain a level of magnetism. Different types of permanent magnets have different characteristics or properties concerning how easily they can be demagnetized, how strong they can be, how their strength varies with temperature, and so on.

Temporary Magnets

Temporary magnets are those which act like a permanent magnet when they are within a strong magnetic field, but lose their magnetism when the magnetic field disappears. Examples would be paperclips and nails.

Electromagnets

An electromagnet is a tightly wound helical coil of wire, usually with an iron core, which acts like a permanent magnet when current is flowing in the wire. The strength and polarity of the magnetic field created by the electromagnet are adjustable by changing the magnitude of the current flowing through the wire and by changing the direction of the current flow.

What are magnets used for?
For the most part, magnets are used to hold, separate, control, convey and elevate products and to convert electrical energy into mechanical energy or convert mechanical energy into electrical energy.
Here's a list of things I've found around the house and in the car that uses magnets or electromagnets to make them work:

Around the house:
Headphones
Stereo speakers
Computer speakers
Telephone receivers
Phone ringers
Microwave tubes
Doorbell ringer solenoid
Refrigerator magnets to hold things
Seal around refrigerator door
Plug-in battery eliminators
Floppy disk recording and reading head
Audio tape recording and playback head
Video tape recording and playback head
Credit card magnetic strip
TV deflection coil
TV degaussing coil
Computer monitor deflection coil
Computer hard drive recording and reading head
Dishwasher water valve solenoid
Shower curtain weights / attach to tub
Power supply transformers

Motors for use in:
CD spinner and head positioner
DVD spinner and head positioner
Audio tape transport
VHS tape transport
VHS tape loader
Microwave stirring fans
Kitchen exhaust fans
Garbage disposal motor
Dishwasher
  Pump
  Timer
Refrigerator
  Compressor
  Ice maker dumper
Sump pump
Furnace
  Blower
  Exhaust
Garage door opener
Clothes washer
  Pump and agitator
  Timer
Clothes dryer
  Timer
  Drum turner
Bathroom exhaust fan
Electric toothbrush
Ceiling fan

Things in the Car:
Starter motor
A/C clutch
Interior fan motor
Electric door locks
Windshield wiper motor
Electric window motor
Side-view mirror adjuster motor
CD player motor
Audio tape player motor
Audio tape recorder and playback heads
Engine speed sensors
Alternator
Starter relay
Windshield washer pump motor

Space
Earth's magnetic field is like a force field that protects us from being fired by harmful ultraviolet radiation and other high speed space particles. (The Core video)

Birds navigate using Earth's Magnetic field.

Materials used for permanent magnets
There are four classes of permanent magnets:
  Neodymium Iron Boron (NdFeB or NIB)
  Samarium Cobalt (SmCo)
  Alnico
  Ceramic or Ferrite

Magnetize the magnet. Place the magnet into a magnetizing fixture that has a coil of wire through which a very large pulse of current is passed for a very short period of time. It takes about a thousandth of a second to actually magnetize the magnet.

How do you take proper care of your permanent magnet?
There are only four areas you need to be concerned with:
a. Mechanical Shock
b. Heat
c. Moisture
d. Demagnetizing Fields

How do magnets work?

Atomic Magnetism

There are only a few elements in the periodic table that are attracted to magnets. None of the elements, by themselves, make good permanent magnets, but can become temporary magnets (when close to another magnet). When alloys of various metals are made, some of these alloys make very good magnets. Why? We don't really know, but we can observe some consistent rules.

As you know, we have seen that when current flows in a wire, a magnetic field is created around the wire. Current is simply a bunch of moving electrons, and moving electrons make a magnetic field. This is how electromagnets are made to work. This will be important to keep in mind as we zoom into the structure of atoms.

Around the nucleus of the atom, where the protons and neutrons live, there are electrons whizzing around. We used to think that they had certain circular orbits like the planets have around the sun, but have discovered that it is much more complicated, and much more exciting! Instead, the patterns of where we would likely find the electron within one of these orbitals takes into account Schroedinger's wave equations. Pictures of each of these orbitals can be found at http://www.shef.ac.uk/chemistry/orbitron/index.html. (These also take into account Heisenberg's uncertainty principle and probability theory.)

If we were to examine Iron (atomic number 26), Cobalt (27), Nickel (28) and Gadolinium (64), all of which are considered ferromagnetic since they are strongly attracted to a magnet, it is difficult to see what makes them so different from the other elements next to them or below them in the periodic table. In other words, if Iron is so strongly magnetic, why isn't Manganese? Perhaps there are other factors we need to take into account such as the crystalline structure. **But it is generally accepted that these ferromagnetic elements have large magnetic moments due to un-paired electrons in their outer orbitals**. This is like having current flowing in a coil of wire, creating a magnetic field. **Even the spin of the electron is thought to create a minute magnetic field**. When you get a bunch of these fields together, they add up to bigger fields.

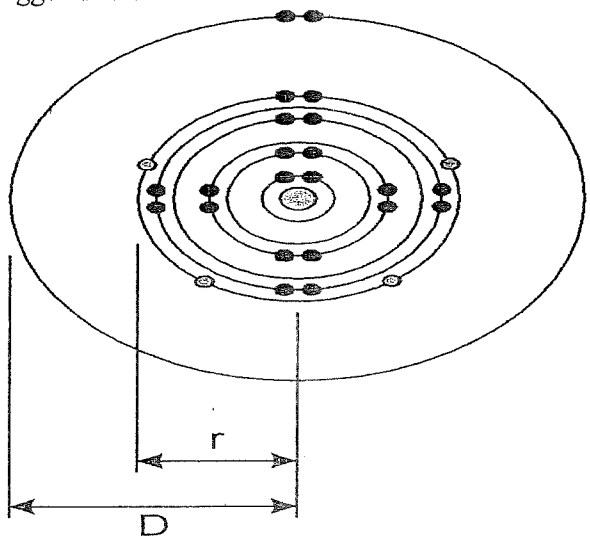

Iron (Fe)
Atomic Number 26
Electron configuration $1s^2 2s^2 2p^6 3s^2 3p^6 3d^6 4s^2$
This shows the electron orbits as circular rings around the nucleus. It really isn't like this, but it makes a good diagram.
The green dot in the center is the nucleus with the 26 protons and 26 neutrons.
The orange dots in the 3d orbital are the 4 unpaired electrons.
The unpaired electrons in 3d create a magnetic moment, or force. It is thought that D/r must be 3 or more to create ferromagnetism. This condition occurs in Iron, Cobalt, Nickel and rare-earth groups.

Magnetic Domains

1. **Magnetic moments in neighboring atoms are held parallel by quantum mechanical forces.**

2. **These atoms with these magnetic characteristics are grouped into regions called domains. Each domain has its own North pole and South pole.**

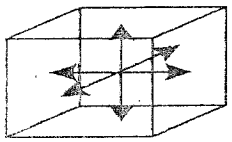

It is equally probable that the magnetism will occur in any one of the six directions.

Magnetic Domain

A Domain is the smallest known permanent magnet. About 6000 domains would occupy an area the size of the head of a common pin.

A domain is composed of approximately one quadrillion (1,000,000,000,000,000 or 10^{15}) atoms.

3. **In unmagnetized ferromagnetic materials, the domains are randomly oriented and neutralize each other or cancel each other out. However, the magnetic fields are still present within the domains!**

(These diagrams show domains as small cubes or squares - kind of a micro view.)

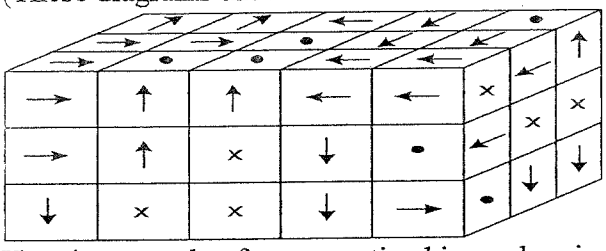

Here is a sample of unmagnetized iron, showing its domains in random magnetic orientations (x is arrow away from you = South Pole, dot is arrow toward you = North Pole)

This shows the magnetic field around that sample of unmagnetized iron with its groups of domains, like those noted above, with random orientations. As you can see, this sample has multiple North and South poles where the magnetic field lines exit and enter the material.

4. **The application of an external magnetic field causes the magnetism in the domains to become aligned so that their magnetic moments are added to each other and lined up with the applied field.**